ДЕТАЛИРОВКА
ГАЗОВОГО ГЕНЕРАТОРА
EVOline GNG 13500 E

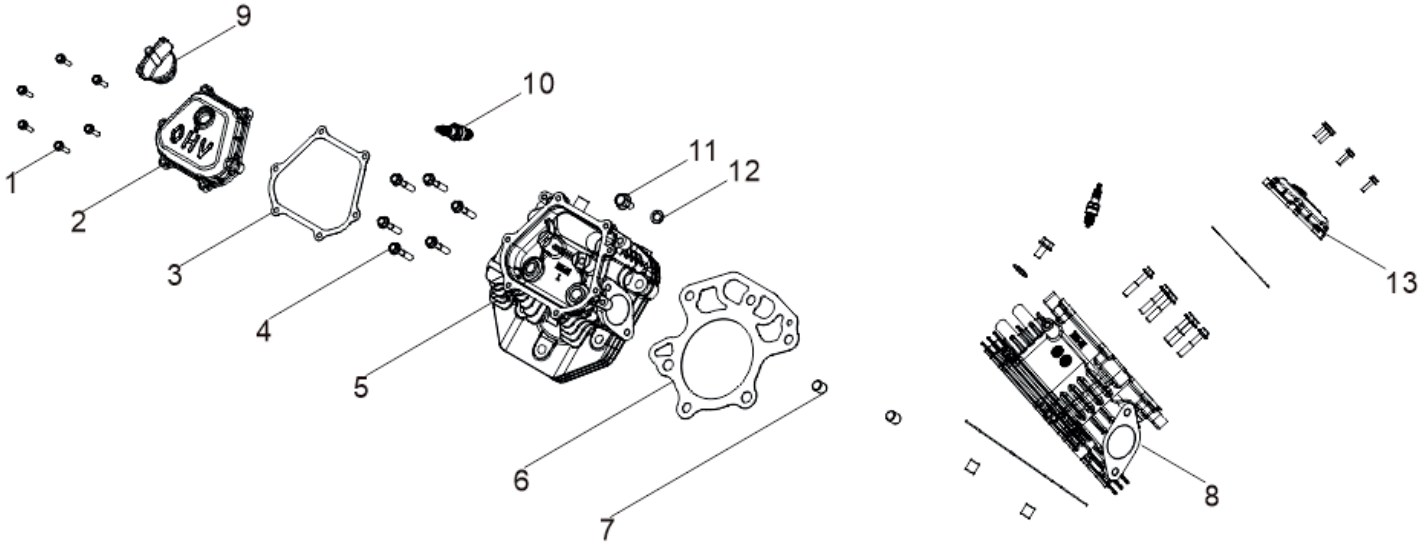

№	Артикул	Наименование	кол-во, шт
1	90007-0628-A1A0EVO	Hexagon Socket Flange Face Bolt - Big Series - Grade B	12
2	12411-Z1X0310-0000EVO	Cover, Cylinder Head	1
3	12004-Z1X0110-00A0EVO	Cylinder Head Cover Gasket	2
4	12003-Z1X0110-0900EVO	Cylinder Head Bolt	12
5	12140-Z1X0510-0000EVO	Head Subassembly, Cylinder	1
6	12131-Z1X0113-0000EVO	Gasket, Cylinder Head	2
7	90502-Z1X0110-0000EVO	Position Pin - Type A	4
8	12140-Z1X0610-0000EVO	Head Subassembly, Cylinder	1
9	15030-ZCB0210-Q5A0EVO	Plug Subassembly, Engine Oil	1
10	30010-Z1X0210-00A0EVO	Plug, Spark	2
11	90007-0612-A1A0EVO	Hexagon Socket Flange Face Bolt - Big Series - Grade B	2
12	90408-Z1X0310-0000EVO	Flat Washer - Grade A	2
13	12411-Z1X0410-0000EVO	Cover, Cylinder Head	1

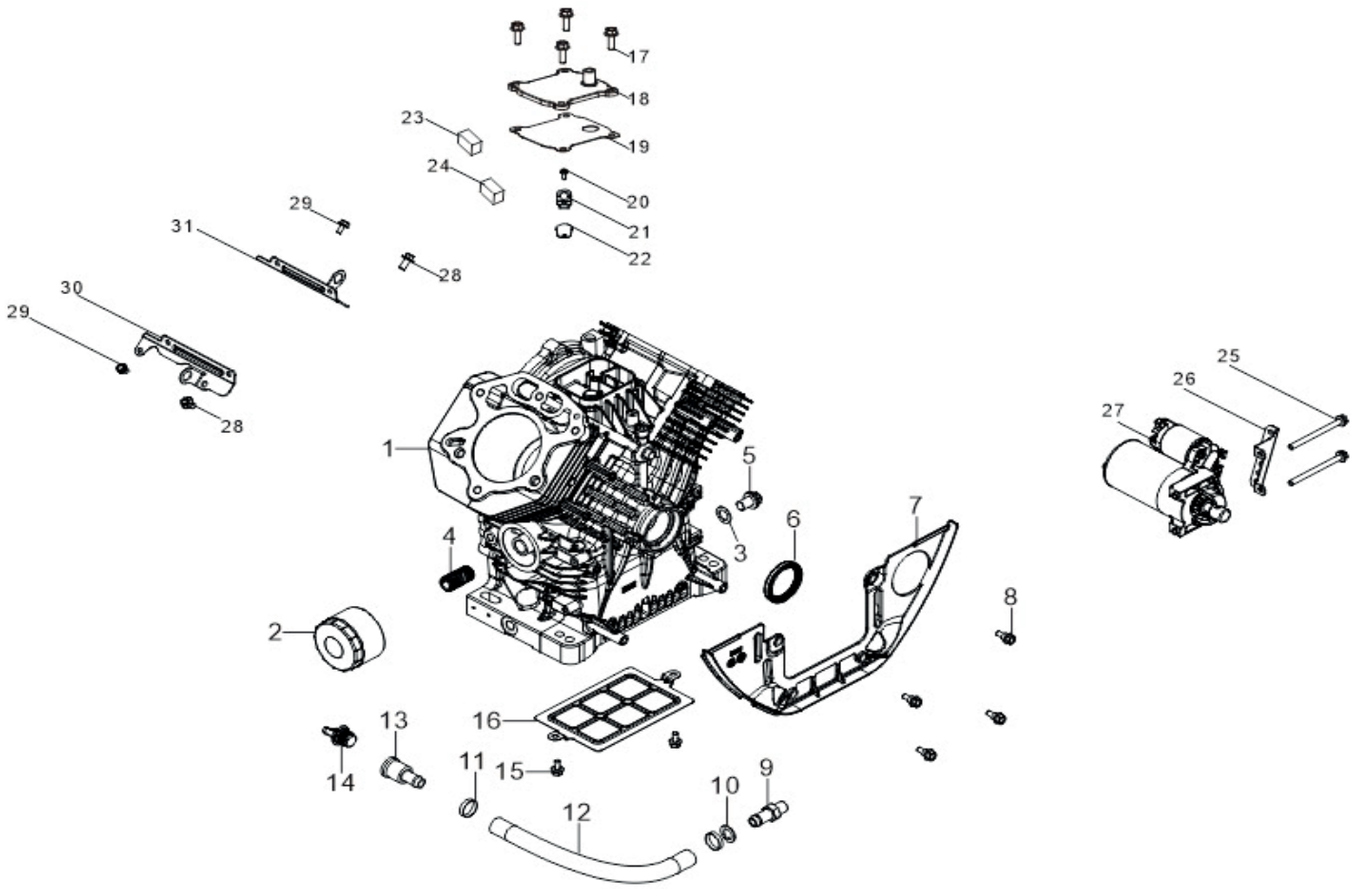

№	Артикул	Наименование	кол-во, шт
1	11310-Z1X0513-00A0EVO	Crankcase Subassembly.	1
2	15220-Z120210-00A0EVO	Filter Subassembly, Oil	1
3	90412-Z080110-00A0EVO	Flat Washer	1
4	15208-Z130120-00A0EVO	Tube Oil Filter Installation	1
5	11007-Z080110-00A0EVO	Bolt, Drain Plug	1
6	90682-Z1X0410-00A0EVO	Seal, Oil	1
7	28118-Z1X0110-00A0EVO	Wind Block	1
8	90007-0616-A1A0EVO	Hexagon Socket Flange Face Bolt - Big Series - Grade B	4
9	90689-Z1X0210-00A0EVO	Joint, Fuel Tube	1
10	90412-Z1X0110-00A0EVO	Flat Washer	1
11	90685-Z1X0110-00A0EVO	Pipe Clamp	2
12	11011-Z1X0310-00A0EVO	Tube, Oil Drain	1
13	90689-Z1X0310-00A0EVO	Joint, Fuel Tube	1
14	15030-Z010130-Q5A0EVO	Plug Subassembly, Engine Oil	1
15	90007-0612-A1A0EVO	Hexagon Socket Flange Face Bolt - Big Series - Grade B	2
16	22082-Z1X0110-09A0EVO	Plate Seat Wind	1
17	90007-0616-A1A0EVO	Hexagon Socket Flange Face Bolt - Big Series - Grade B	4
18	11333-Z1X0210-0BA0EVO	Plate, Breath Groove Cover	1
19	11332-Z1X0310-00A0EVO	Gasket, Breath Groove	1
20	90103-0410-51A0EVO	Cross-Recessed Pan Head Screw	1
21	12045-Z240110-00A0EVO	Leaf Valve Stop Plate	1
22	11321-Z180110-00A0EVO	Breath Sheet	1
23	11331-Z1X0110-0000EVO	Strainer, Breath Groove	1
24	11331-Z870110-00A0EVO	Strainer, Breath Groove	1
25	90001-08A0-01A0EVO	Hexagon Socket Flange Face Bolt - Small Series	2
26	31303-YPQ0211-0EA0EVO	Block, Terminal	1
27	30300-Z1X0311-00A0EVO	Starting Motor Assembly	1
28	90001-0816-01A0EVO	Hexagon Socket Flange Face Bolt - Big Series - Grade B	2
29	90007-0612-A1A0EVO	Hexagon Socket Flange Face Bolt - Big Series - Grade B	2
30	17003-Z1X0510-00A0EVO	Support Atr Cleaner	1
31	17003-Z1X0611-00A0EVO	Support Atr Cleaner	1

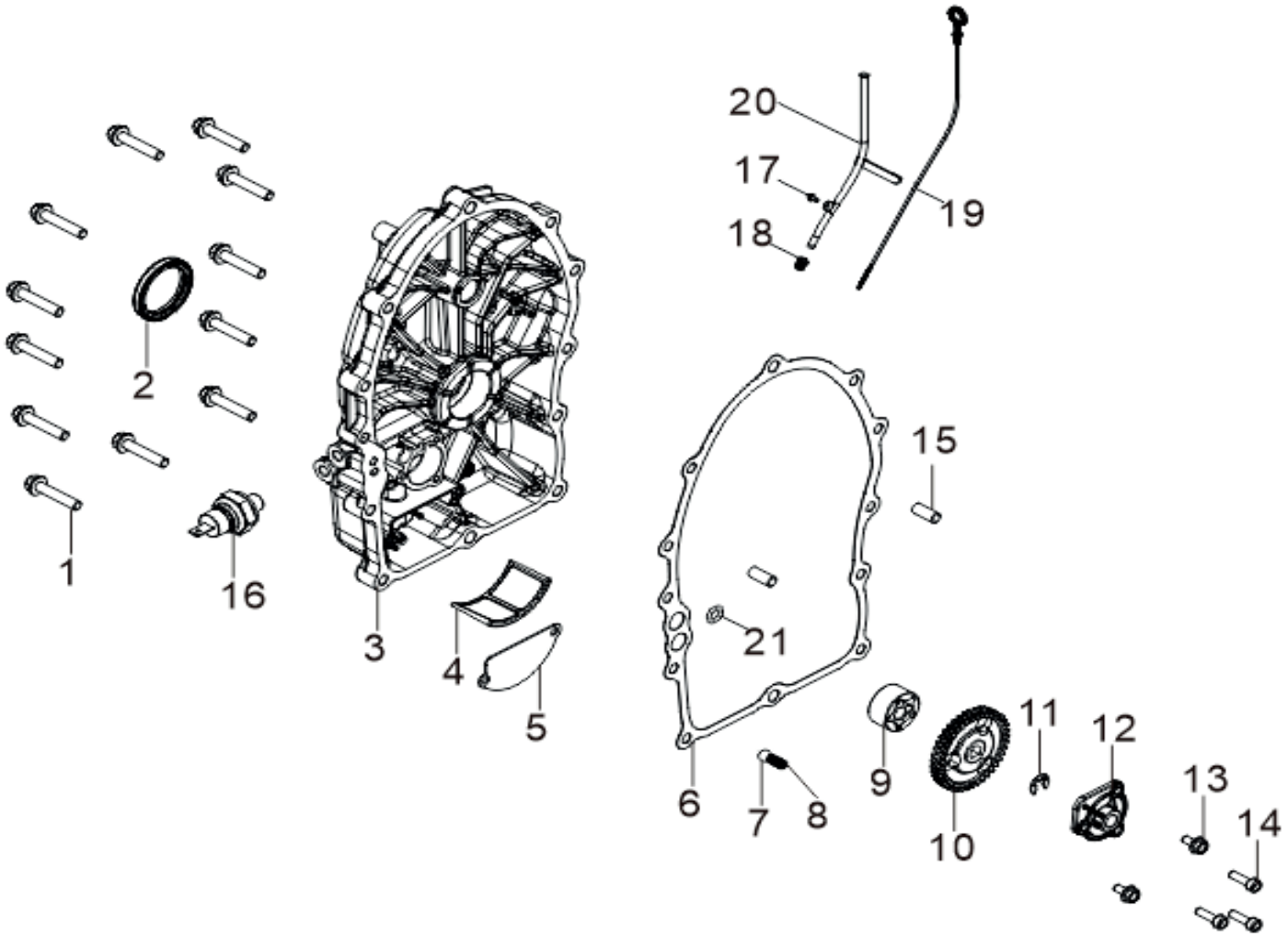

№	Артикул	Наименование	кол-во, шт
1	90007-0840-A1A0EVO	Hexagon Socket Flange Face Bolt - Big Series - Grade B	12
2	90682-Z1X0310-00A0EVO	Seal, Oil	1
3	11410-Z1X0411-00A0EVO	Cover Subassembly, Crankcase	1
4	15211-Z1X0210-00A0EVO	Strainer, Oil	1
5	15214-Z1X0110-0900EVO	Cover, Oil Strainer	1
6	11001-Z1X0111-00A0EVO	Gasket, Crankcase	1
7	90543-9500-00A0EVO	Ball, Steel	1
8	15161-Z1X0110-0000EVO	Spring, Pressure Relief Valve	1
9	15100-Z8K0110-00A0EVO	Pump Assy, Oil	1
10	15105-Z1X0210-00A0EVO	Gear, Oil Pump Driven	1
11	90575-0900-06A0EVO	Split Washer	1
12	15141-Z1X0110-00A0EVO	Cover, Oil Pump	1
13	90007-0612-A1A0EVO	Hexagon Socket Flange Face Bolt - Big Series - Grade B	3
14	90102-0616-0101EVO	Hexagon Socket Head Cap Screw	3
15	90502-1014-00A0EVO	Position Pin - Type A	2
16	15202-Z130120-0000EVO	Sensor, Pressure	1
17	90007-0620-A1A0EVO	Hexagon Socket Flange Face Bolt - Big Series - Grade B	1
18	15014-Z120111-0000EVO	Oil Dipstick Seal Plug	1
19	15010-Z8K0210-Q500EVO	Dipstick Subassembly, Oil	1
20	15020-ZB60110-00A0EVO	Tube, Fueling	1
21	90692-Z1X0110-0000EVO	O-Type Rubber Seal Ring	1

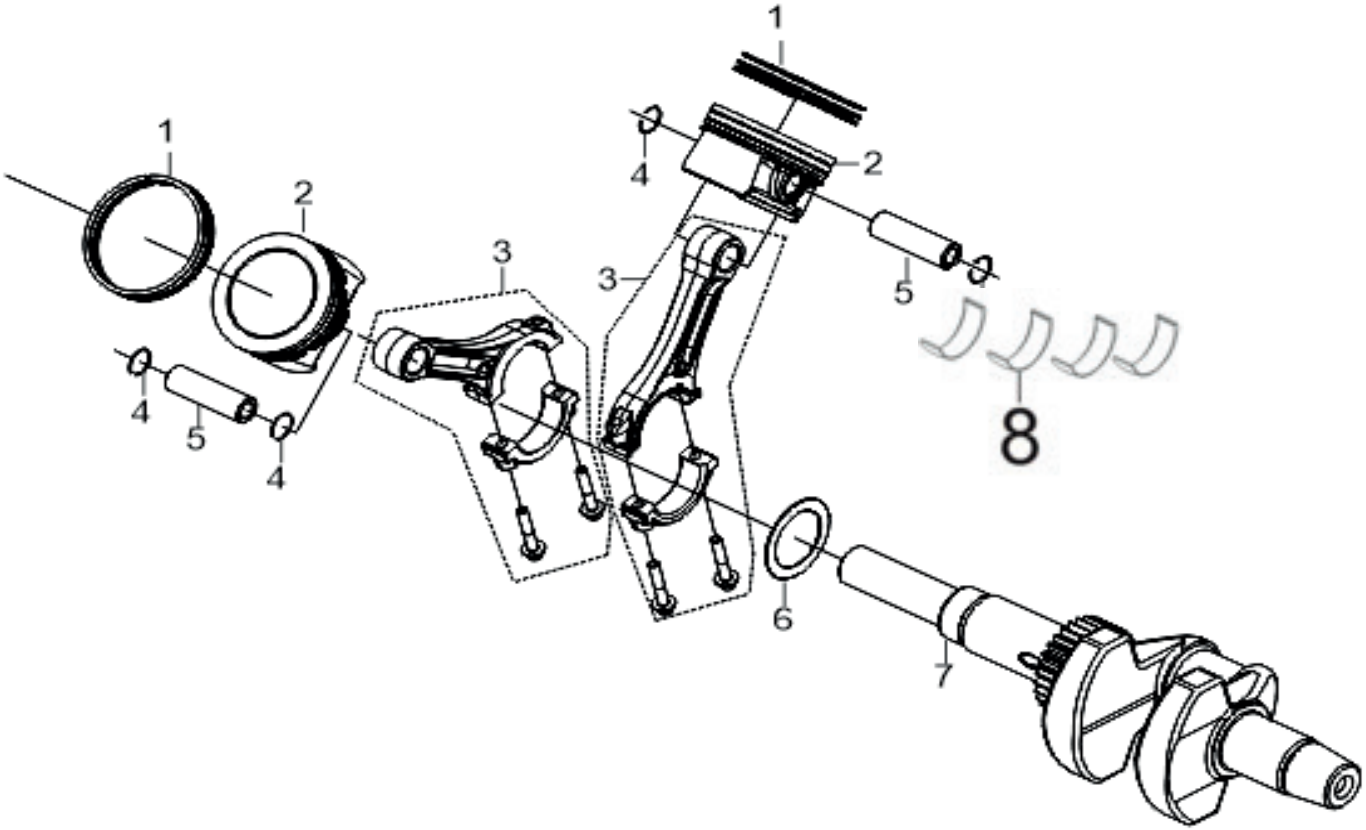

№	Артикул	Наименование	кол-во, шт
1	13200-ZA90110-00A0EVO	Ring Assy, Piston	2
2	13111-Z1X0210-00A0EVO	Piston	2
3	13010-Z1X0210-00A0EVO	Rod, Connecting	2
4	13122-Z100110-00A0EVO	Clip, Piston Pin	4
5	13121-Z1X0110-0000EVO	Pin, Piston	2
6	90408-Z1X0110-0600EVO	Flat Washer - Grade A	1
7	13300-Z1X0211-00A0EVO	Crankshaft Assy.	1
8	13005-Z1X0110-00A0EVO	Bearing Bush	4

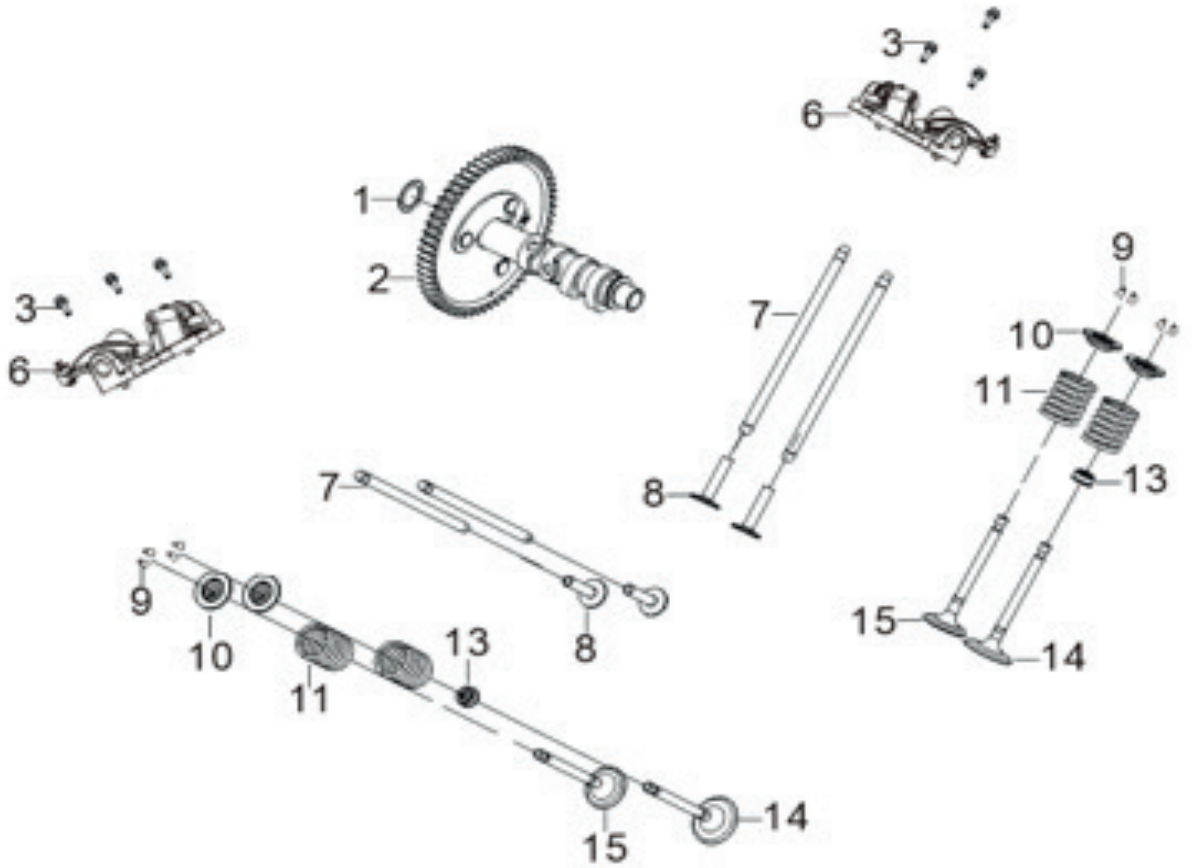

№	Артикул	Наименование	кол-во, шт
1	90408-Z1X0210-0600EVO	Flat Washer - Grade A	1
2	14200-Z1X0310-00A0EVO	Camshaft Assy.	1
3	90102-0620-01A1EVO	Hexagon Socket Head Cap Screw	6
6	14310-ZB60210-0000EVO	Rocker Subassembly, Valve	2
7	14070-ZB60110-0000EVO	Lifter Subassembly, Valve	4
8	14081-Z1X0110-0000EVO	Tappet, Valve	4
9	12109-Z940110-0000EVO	Clamp, Valve Lock	8
10	12112-Z400110-00A0EVO	Seat, Valve Spring	4
11	12103-Z1X0110-0000EVO	Spring, Valve	4
13	12101-Z080110-00A0EVO	Guide, Seal	2
14	12111-Z1X0110-0000EVO	Valve, Intake	2
15	12121-Z1X0110-0000EVO	Valve, Exhaust	2

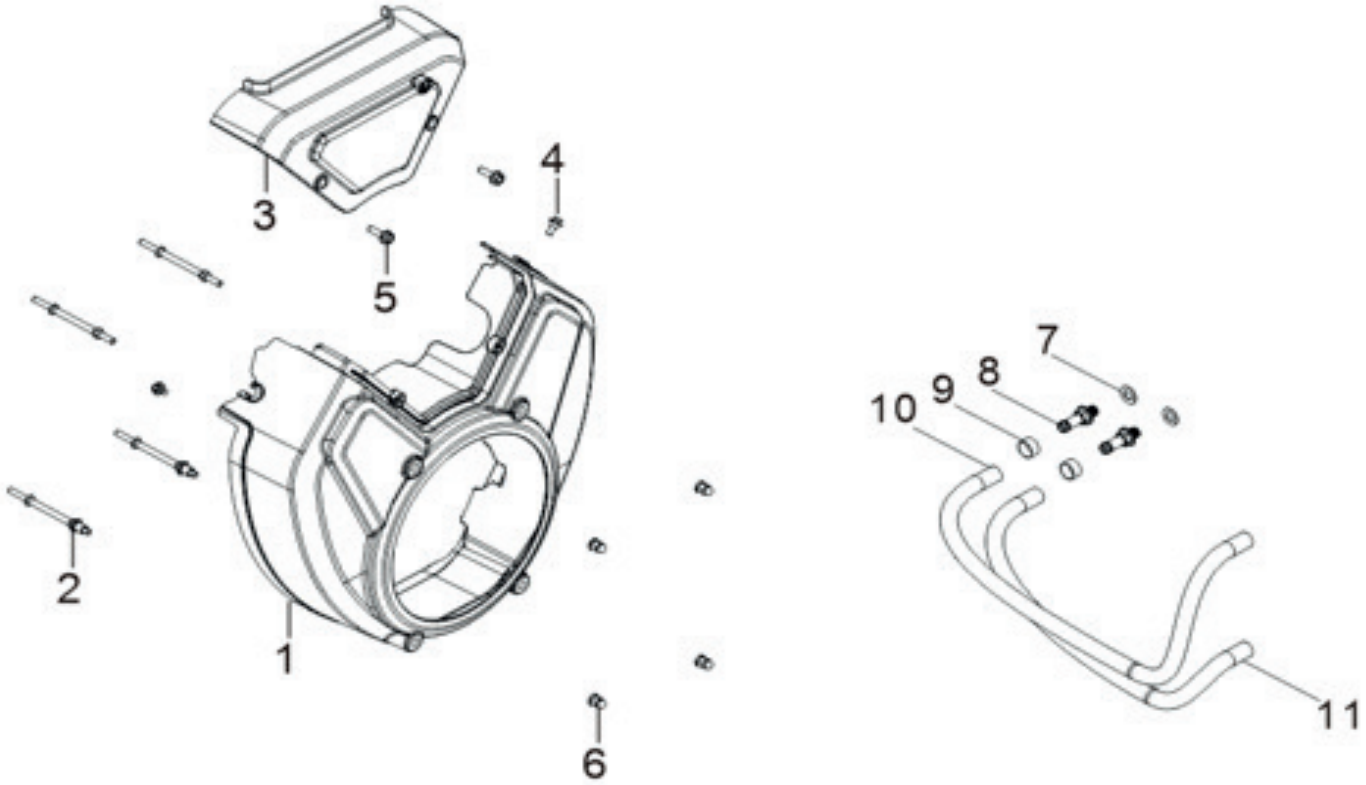

№	Артикул	Наименование	кол-во, шт
1	19330-Z1X0210-Q2A0EVO	Shroud Assy.	1
2	28001-Z1X0110-0900EVO	Double Head Support Bolt	4
3	30028-Z1X0110-00A0EVO	Shield Shroud	1
4	90208-Z1X0111-0900EVO	Hexagonal Step Bolt	2
5	90007-0620-A1A0EVO	Bolt	2
6	90305-0600-31A0EVO	Hexagon Nut With Flange	4
7	90408-Z010110-00A0EVO	Flat Washer - Grade A	2
8	90689-Z1X0110-09A0EVO	Joint, Fuel Tube	2
9	90685-D180-0EA0EVO	Pipe Clamp	2
10	19111-YVX0210-0000EVO	Pipe, Cooling	1
11	19111-Z1X0411-00A0EVO	Pipe, Cooling	1

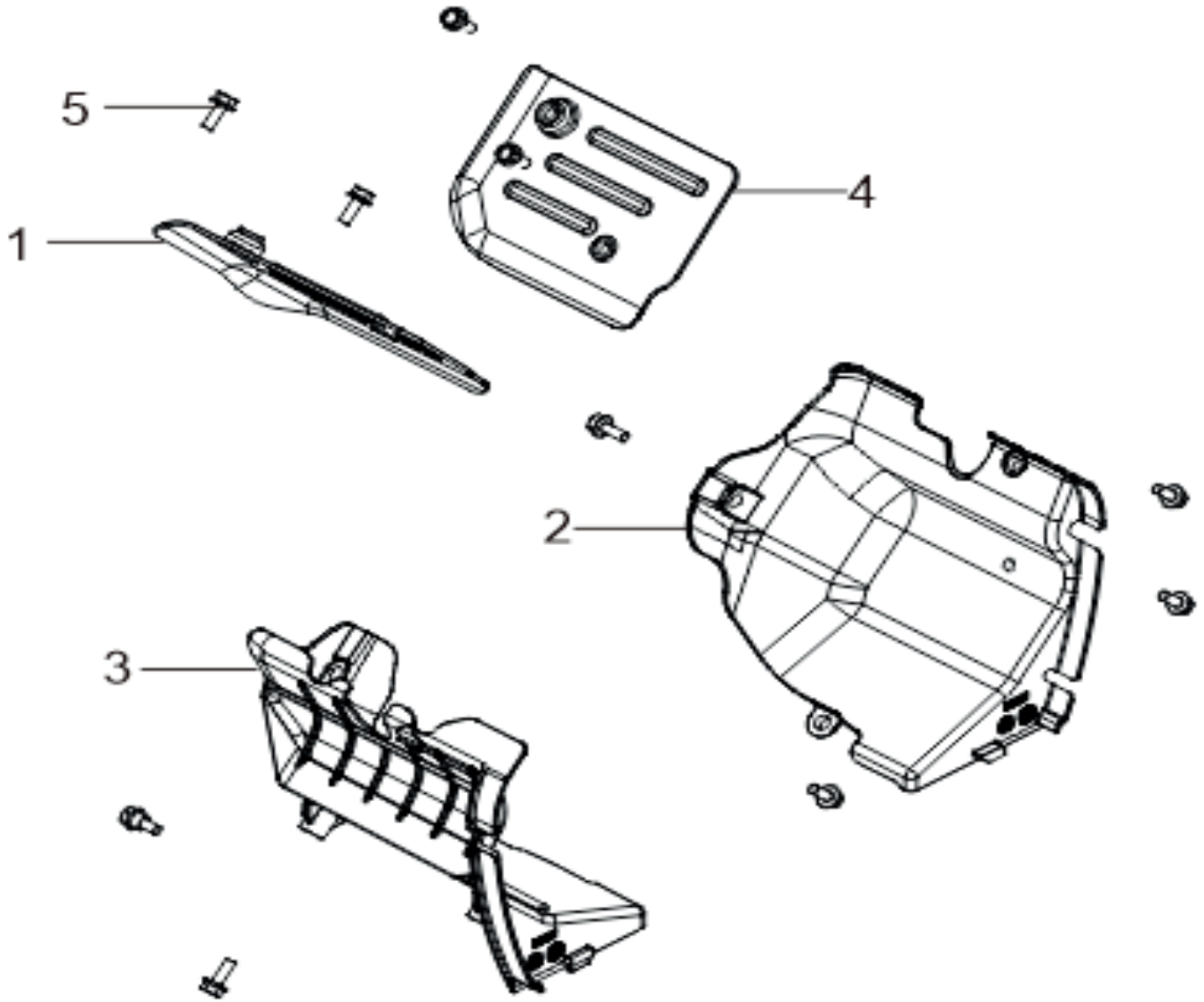

№	Артикул	Наименование	кол-во, шт
1	28118-Z1X0210-00A0EVO	Wind Block	1
2	19304-Z1X0211-00A0EVO	Shroud, Cylinder Body	1
3	19304-Z1X0310-00A0EVO	Shroud, Cylinder Body	1
4	28118-Z1X0310-00A0EVO	Wind Block	1
5	90007-0616-A1A0EVO	Hexagon Socket Flange Face Bolt - Big Series - Grade B	9

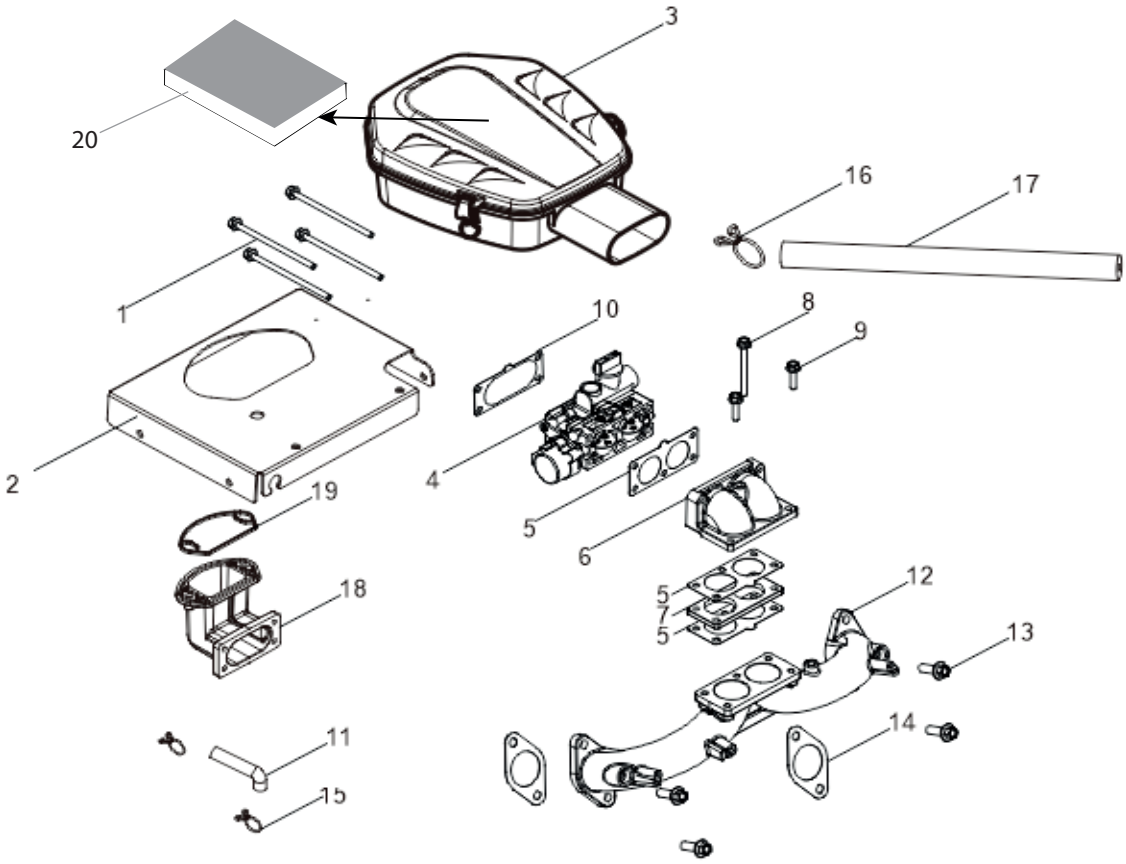

№	Артикул	Наименование	кол-во, шт
1	90007-0680-A1A0EVO	Hexagon Socket Flange Face Bolt - Big Series - Grade B	4
2	16673-Z1X0310-H600EVO	Shield	1
3	17100-Z1X0511-0000EVO	Air Cleaner	1
4	16B00-ZB60310-0000EVO	Gas Mixer Components	1
5	16004-Z1X0110-0000EVO	Gasket, Insulator Plate	3
6	12501-Z1X0110-0000EVO	Joint, Intake Tube	1
7	16003-Z1X0110-0000EVO	Plate, Carburetor Insulator	1
8	90007-0665-A1A0EVO	Hexagon Socket Flange Face Bolt - Big Series - Grade B	1
9	90007-0625-A1A0EVO	Hexagon Socket Flange Face Bolt - Big Series - Grade B	2
10	17001-Z1X0110-0000EVO	Air Cleaner Seal Gasket	1
11	17004-ZB60210-0000EVO	Tube, Breather	1
12	12510-Z1X0310-0000EVO	Tube, Intake	1
13	90001-0825-01A0EVO	Hexagon Socket Flange Face Bolt - Small Series	4
14	17002-Z1X0110-0000EVO	Gasket, Inlet	2
15	90685-Z120110-00A0EVO	Pipe Clamp	2
16	90685-YPQ0110-01A0EVO	Pipe Clamp	1
17	90729-YPQ0310-0000EVO	Duct, Air	1
18	17112-ZB60110-0000EVO	Tube, Air Cleaner Connecting	1
19	90681-ZCD0110-00A0EVO	Ring, Seal	1
20	17150-ZB60110-0000EVO	Air filter element	1

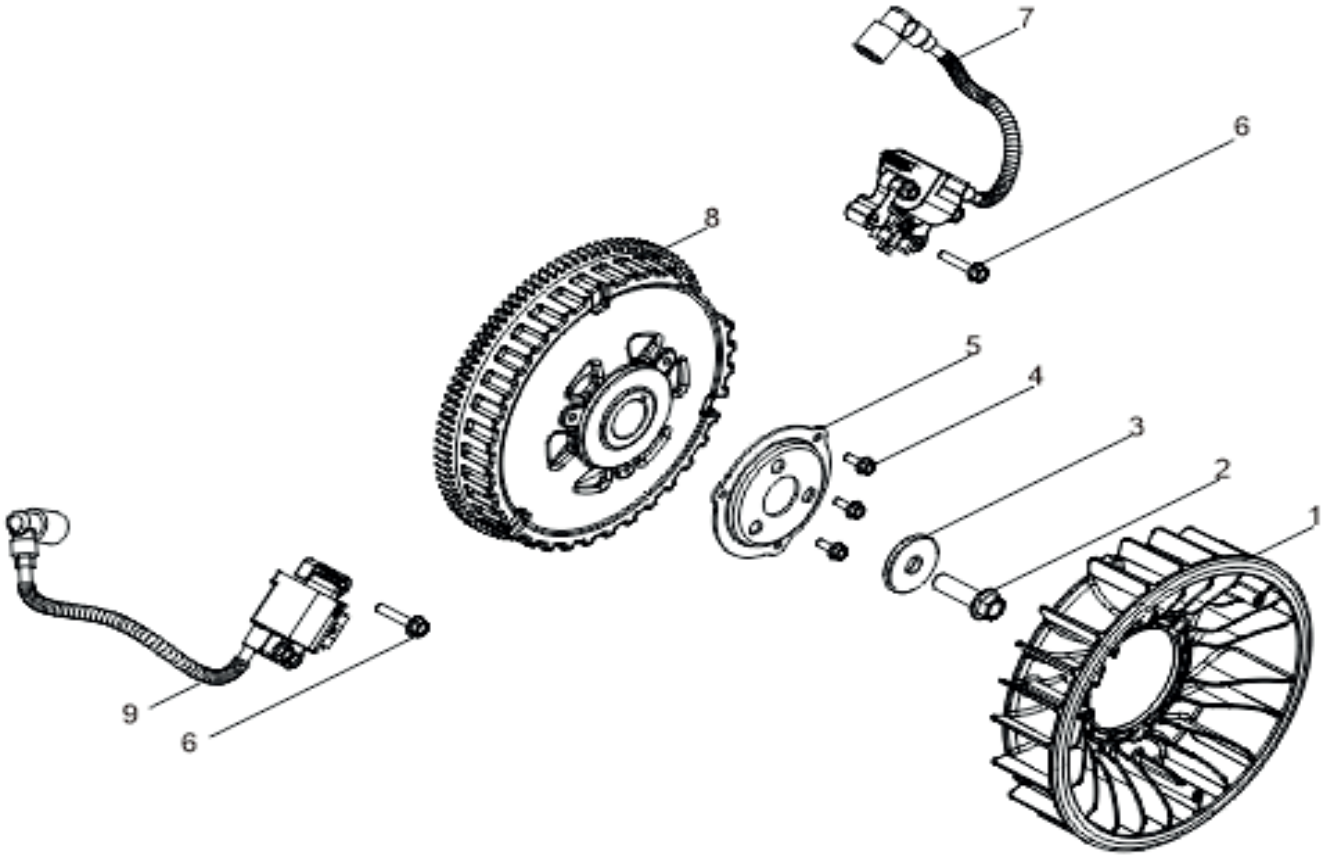

№	Артикул	Наименование	кол-во, шт
1	19352-Z1X0113-00A0EVO	Impeller	1
2	13502-Z1X0110-0EA0EVO	Bolt Flywheel	1
3	90407-Z1X0110-0900EVO	Large Washer - Grade C	1
4	90007-0620-A1A0EVO	Hexagon Socket Flange Face Bolt - Big Series - Grade B	3
5	13515-Z1X0110-00A0EVO	Tray, Impeller Setting	1
6	90007-0630-A1A0EVO	Hexagon Socket Flange Face Bolt - Big Series - Grade B	2
7	30400-ZB60211-00A0EVO	Coil, Ignition	1
8	13500-Z1X0311-00A0EVO	Flywheel Assy.	1
9	30400-ZB60111-00A0EVO	Coil, Ignition	1

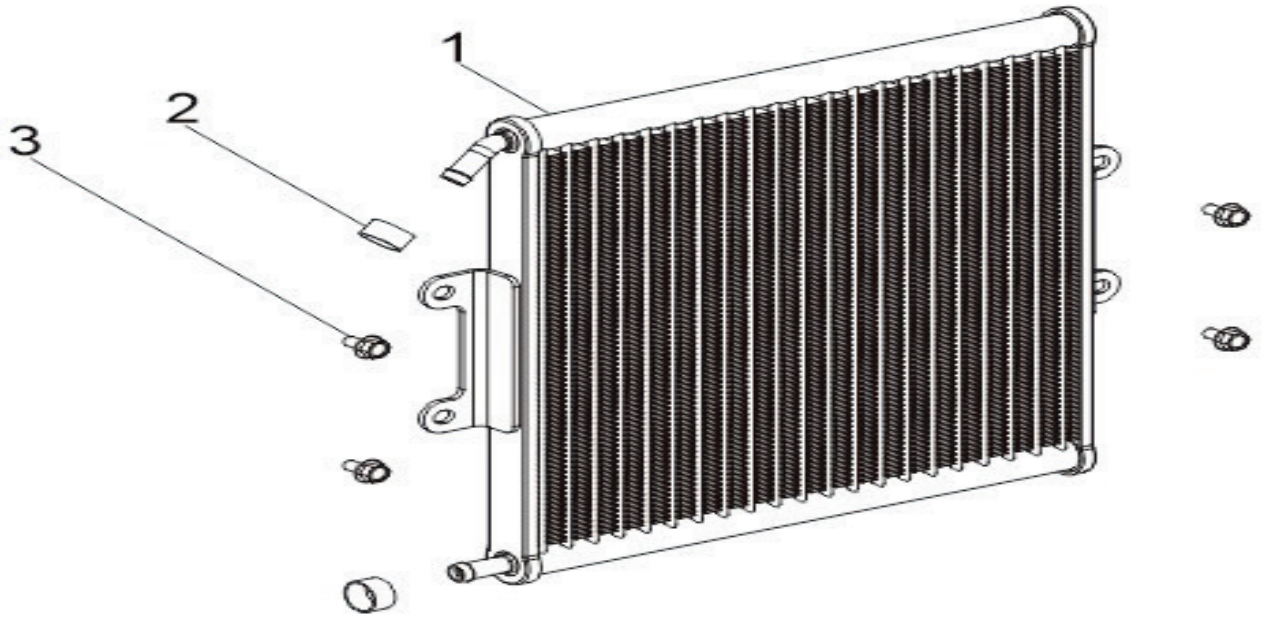

№	Артикул	Наименование	кол-во, шт
1	19100-YVX0110-0000EVO	Radiator Assy.	1
2	90685-D180-0EA0EVO	Pipe Clamp	2
3	90022-YPQ0110-05A0EVO	Hexagon Socket Flange Face Bevel Bolt	4

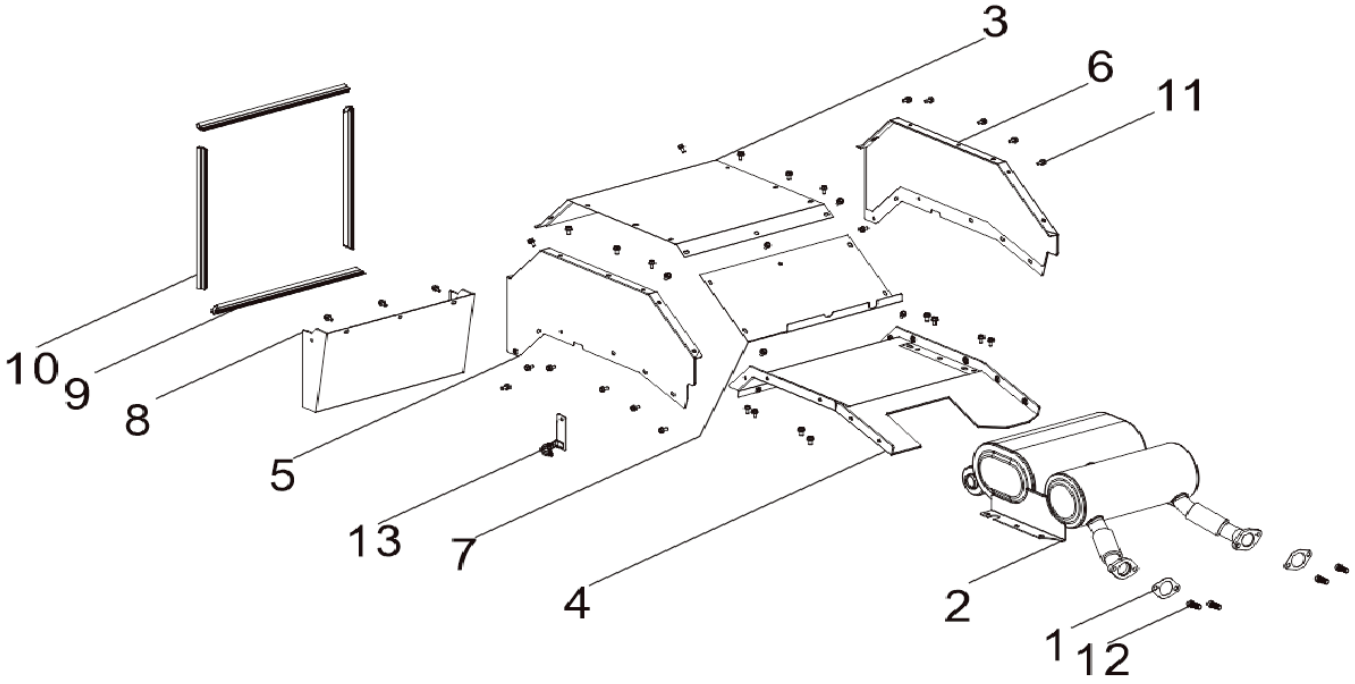

№	Артикул	Наименование	кол-во, шт
1	18001-Z1X0110-00A0EVO	Gasket, Exhaust Outlet	2
2	18100-YVX0110-0000EVO	Muffler Assy.	1
3	18109-YVX0110-H600EVO	Shroud Muffler	1
4	18109-YVX0210-H600EVO	Shroud Muffler	1
5	18109-YVX0310-H600EVO	Shroud Muffler	1
6	18109-YVX0410-H600EVO	Shroud Muffler	1
7	18109-YVX0510-H600EVO	Shroud Muffler	1
8	18109-YVX0610-H600EVO	Shroud Muffler	1
9	51198-YPQ0110-00A0EVO	Seal Strip	2
10	51198-YPQ0210-00A0EVO	Seal Strip	2
11	90022-YPQ0110-05A0EVO	Hexagon Socket Flange Face Bevel Bolt	35
12	90102-1025-26A0EVO	Hexagon Socket Head Cap Screw	4
13	51149-YVX0110-H600EVO	Oil Tube Bracket	1

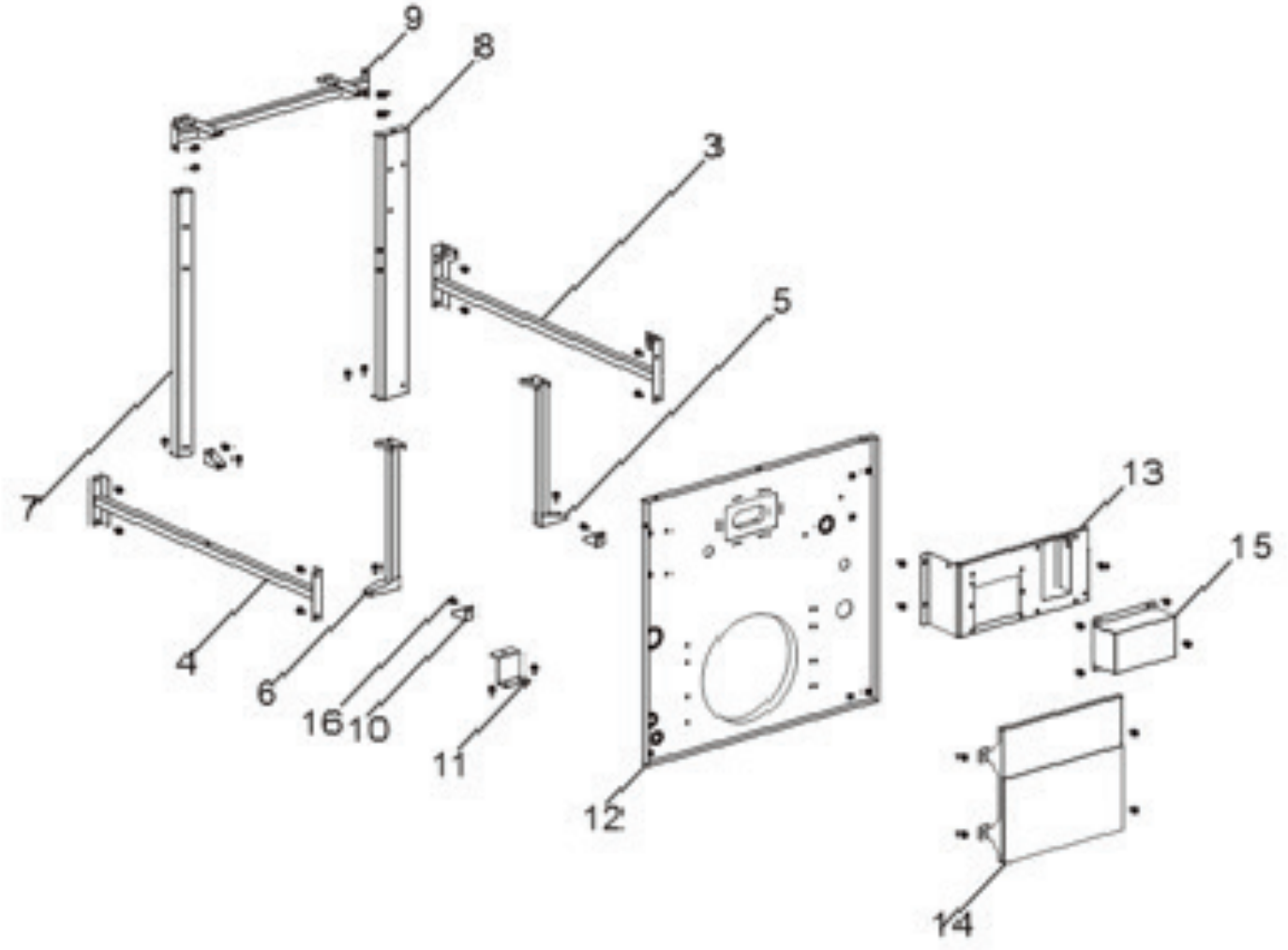

№	Артикул	Наименование	кол-во, шт
3	51035-YVX0110-H600EVO	Support	1
4	51035-YVX0210-H600EVO	Support	1
5	51035-YVX0310-H600EVO	Support	1
6	51035-YVX0410-H600EVO	Support	1
7	51035-YVX0510-H600EVO	Support	1
8	51035-YVX0610-H600EVO	Support	1
9	51035-YVX0710-H600EVO	Support	1
10	51168-YT20110-H6A0EVO	Lug	3
11	51168-YT20310-H6A0EVO	Lug	1
12	76021-YVX0110-H600EVO	Block	1
13	76021-YVX0210-0000EVO	Block	1
14	76021-YVX0310-H600EVO	Block	1
15	76021-YVX0410-H600EVO	Block	1
16	90022-YPQ0110-05A0EVO	Hexagon Socket Flange Face Bevel Bolt	38

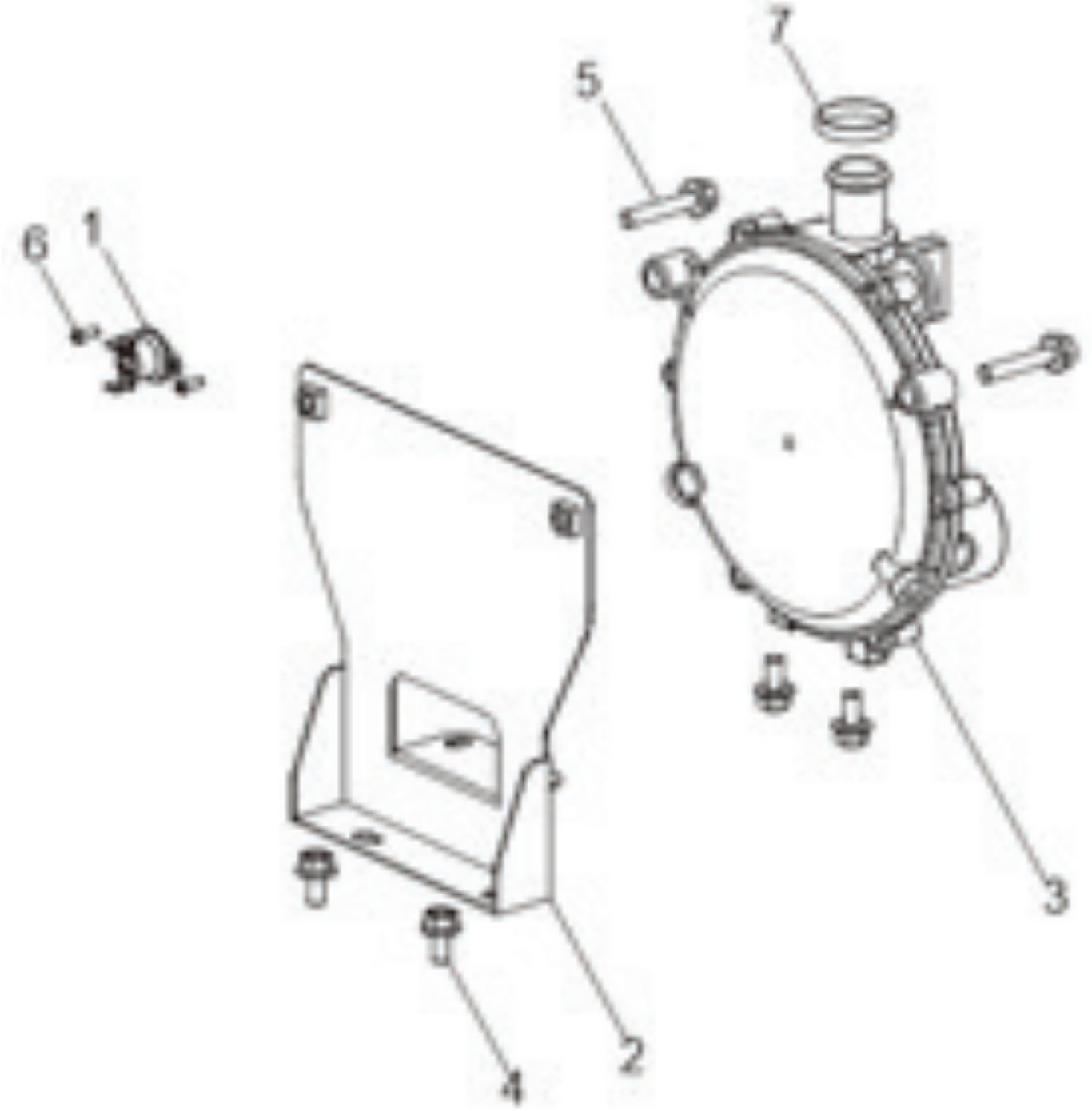

№	Артикул	Наименование	кол-во, шт
1	37009-Z1X0110-00A0EVO	Sensor, Temperature	1
2	77002-YT20110-H6A0EVO	Gas Pressure Relief Valve Mounting Bracket	1
3	77100-YPQ0210-0000EVO	Gas Pressure Relief Valve	1
4	90022-YPQ0110-05A0EVO	Hexagon Socket Flange Face Bevel Bolt	4
5	90022-YPQ0310-05A0EVO	Hexagon Socket Flange Face Bevel Bolt	2
6	90103-0306-01EVO	Cross-Recessed Pan Head Screw	2
7	90748-1222-00A0EVO	Small Spiral Narrow Band Collar - Type A	1

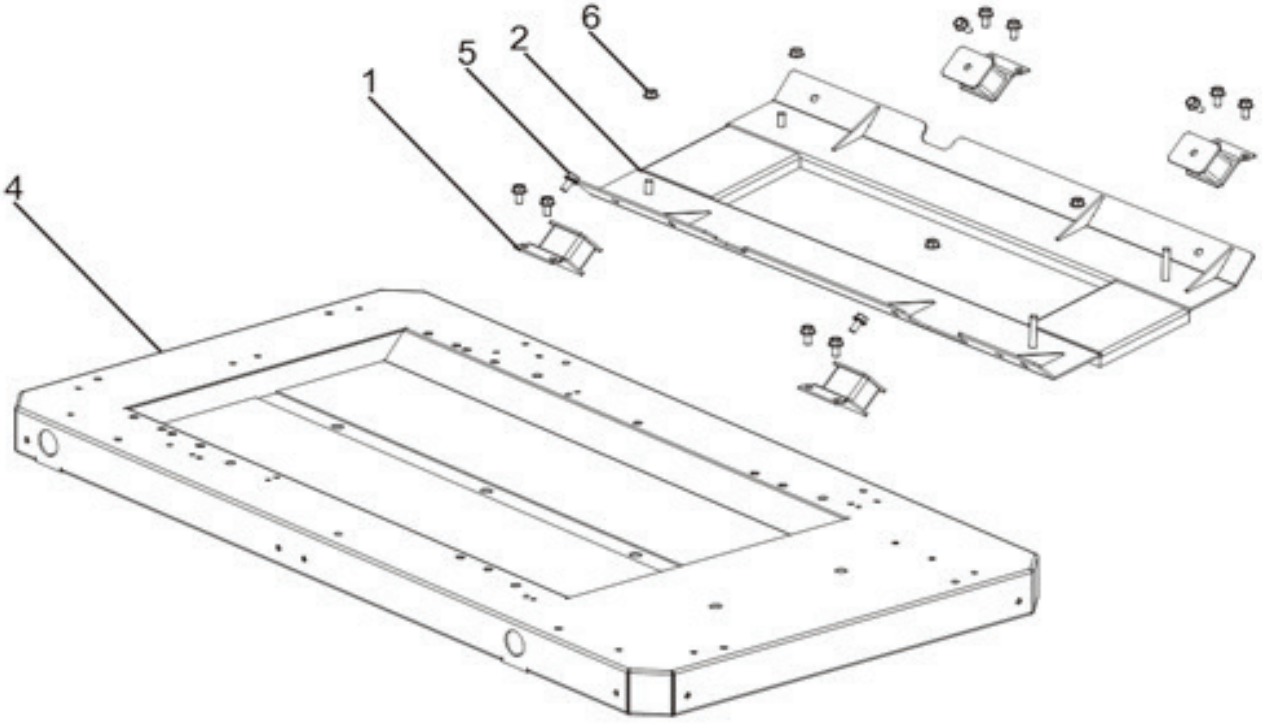

№	Артикул	Наименование	кол-во, шт
1	51005-YT20310-0000EVO	Cushion, Engine Frame	4
2	51143-YVX0310-H600EVO	Plate Bottom	1
4	78100-YVX0111-H600EVO	Base Components	1
5	90001-0816-01A0EVO	Hexagon Socket Flange Face Bolt - Small Series	12
6	90327-0800-33EVO	Hexagon Nut With Flange	4

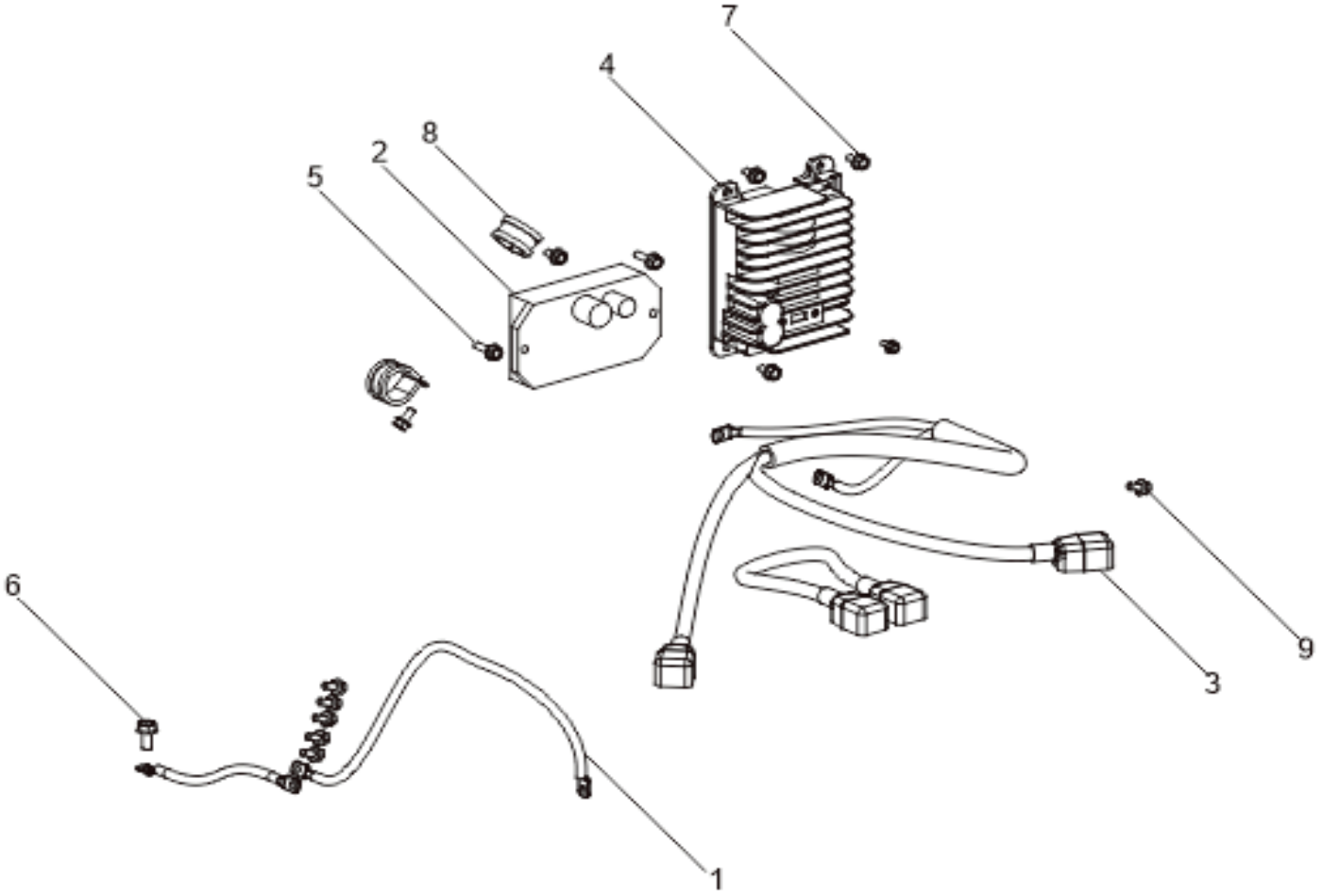

№	Артикул	Наименование	кол-во, шт
1	30009-YVX0111-0000EVO	Grounding	1
2	30060-YVX0110-0000EVO	Regulator, Voltage	1
3	31112-YVX0110-0000EVO	Wire, Anode	1
4	31155-YVX0111-0000EVO	Battery Charger	1
5	90007-0620-A1A0EVO	Hexagon Socket Flange Face Bolt - Small Series	2
6	90001-0816-01A0EVO	Hexagon Socket Flange Face Bolt - Small Series	1
7	90022-YPQ0110-05A0EVO	Hexagon Socket Flange Face Bevel Bolt	12
8	90740-YPQ0110-00A0EVO	Collar	2
9	90001-0510-01A0EVO	Hexagon Socket Flange Face Bolt - Small Series	1

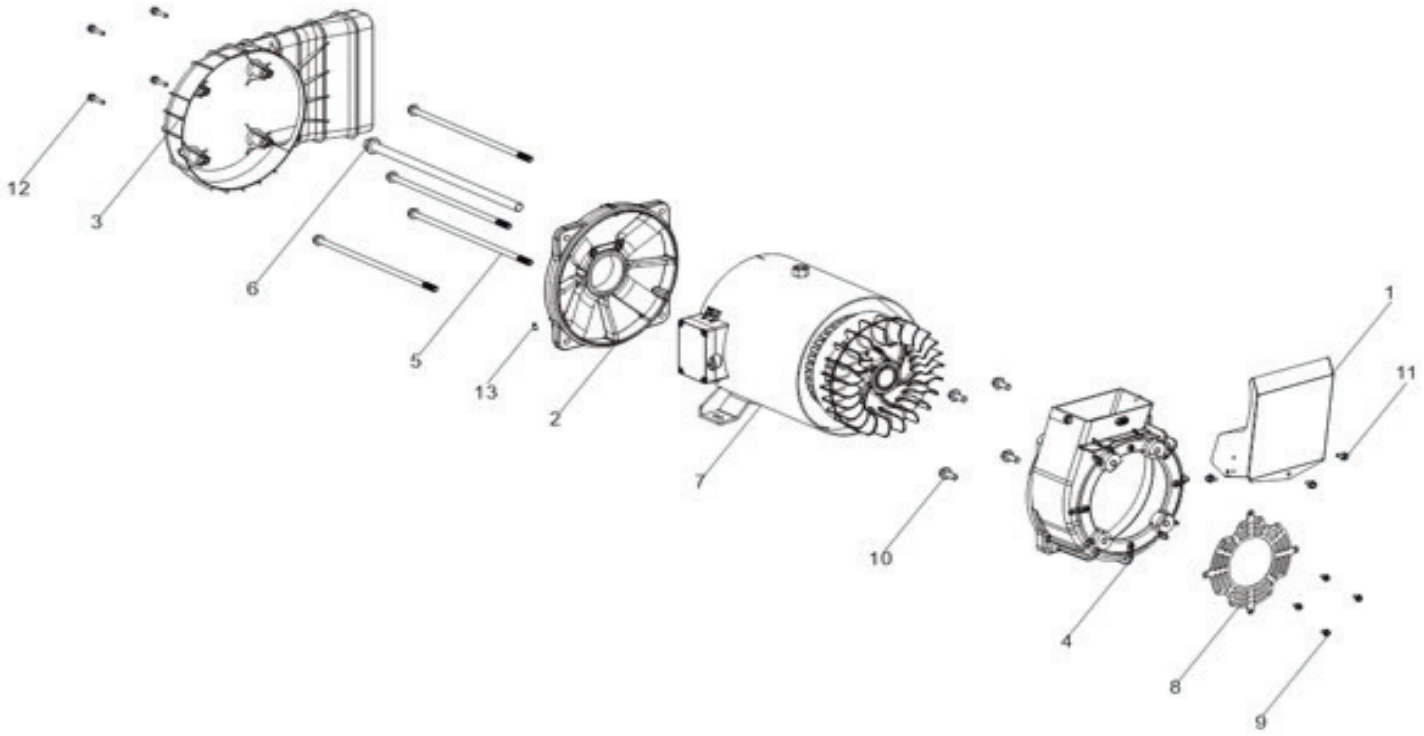

№	Артикул	Наименование	кол-во, шт
1	19313-YPQ0112-H6A0EVO	Wind Deflector	1
2	30021-YPQ0111-00A0EVO	Motor Support	1
3	30022-YVX0110-Q200EVO	Motor Tail Cover	1
4	30031-YVX0110-0000EVO	Cover, Motor Front End	1
5	30048-YPQ0110-01A0EVO	Stator Bolt	4
6	30049-YPQ0110-0000EVO	Bolt Rotor	1
7	31300-YVX0510-0000EVO	Motor Assy.	1
8	76021-YPQ0411-H6A0EVO	Block	1
9	90001-0510-01A0EVO	Hexagon Socket Flange Face Bolt - Small Series	4
10	90001-1025-01A0EVO	Hexagon Socket Flange Face Bolt - Small Series	4
11	90022-YPQ0110-05A0EVO	Hexagon Socket Flange Face Bevel Bolt	3
12	90022-YPQ0310-05A0EVO	Hexagon Socket Flange Face Bevel Bolt	4
13	90121-0612-26EVO	Hexagon Socket Flat End Set Screw	1

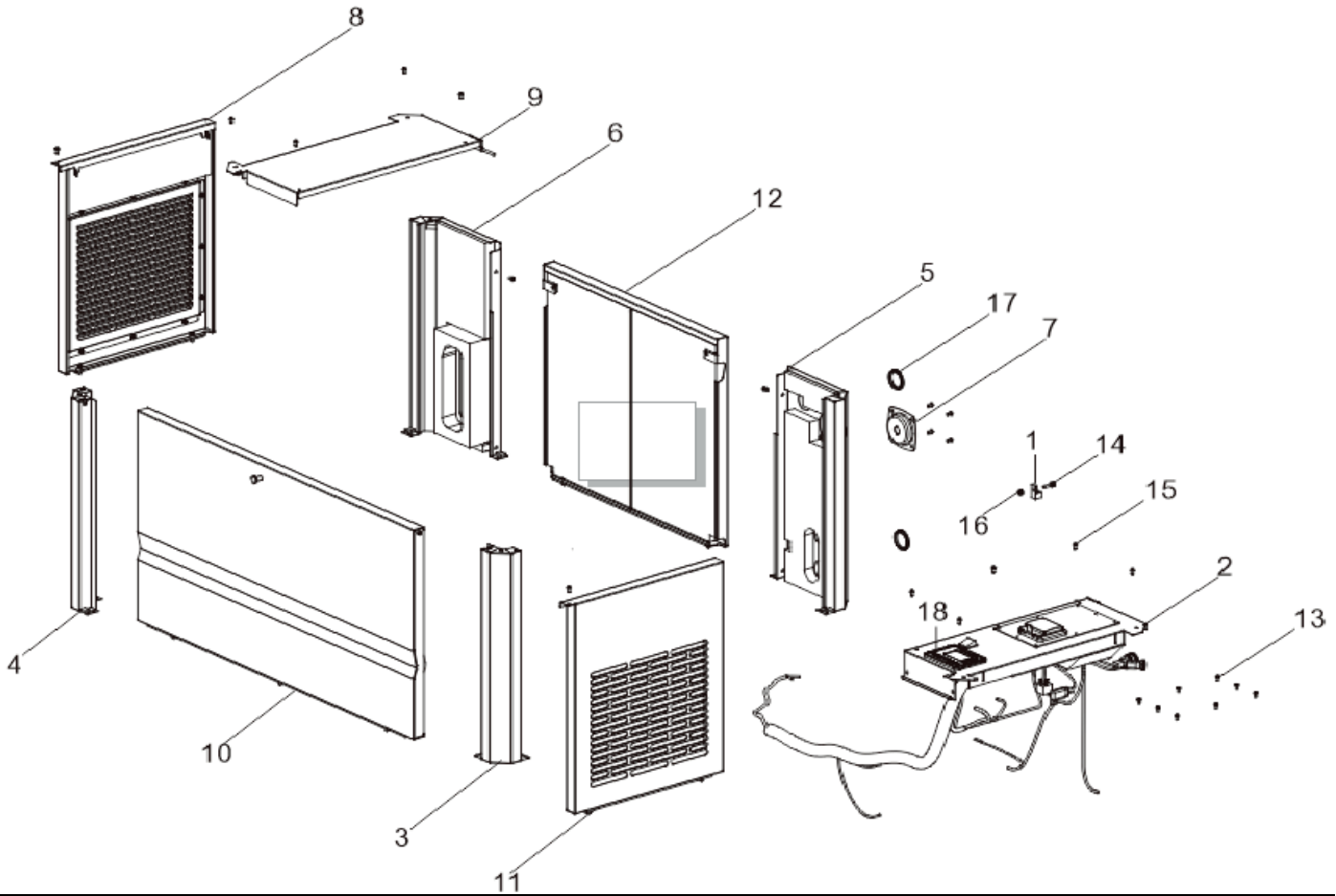

№	Артикул	Наименование	кол-во, шт
1	31306-YPQ0210-00A0EVO	Wiring Terminal	1
2	35610-YVX0510-H600EVO	Panel Subassembly, Control	1
3	51116-YVX0110-GQ00EVO	Engine Frame Enclosure Frame	1
4	51116-YVX0210-GQ00EVO	Engine Frame Enclosure Frame	1
5	51116-YVX0310-GQ00EVO	Engine Frame Enclosure Frame	1
6	51116-YVX0410-GQ00EVO	Engine Frame Enclosure Frame	1
7	51124-YVX0110-H600EVO	Mounting Bracket	1
8	80092-YVX0110-GQ00EVO	Left Housing Cover Plate	1
9	80093-YVX0110-H600EVO	Left Decorated Plate	1
10	80094-YVX0410-GQ00EVO	Front Appearance Cover Plate	1
11	80096-YVX0110-GQ00EVO	Right Appearance Cover Plate	1
12	80103-YVX0310-GQ00EVO	Rear Appearance Cover Plate	1
13	90022-YPQ0110-05A0EVO	Hexagon Socket Flange Face Bevel Bolt	13
14	90022-YPQ0210-05A0EVO	Hexagon Socket Flange Face Bevel Bolt	1
15	90111-Y460110-0000EVO	Screw, Inner Hex. Flat	17
16	90327-0600-31A0EVO	Hexagon Lock Nut With Flange	1
17	90722-YPQ0310-00A0EVO	Plug, End	2
18	35650-YVX0510-0000EVO	Panel, Control	1

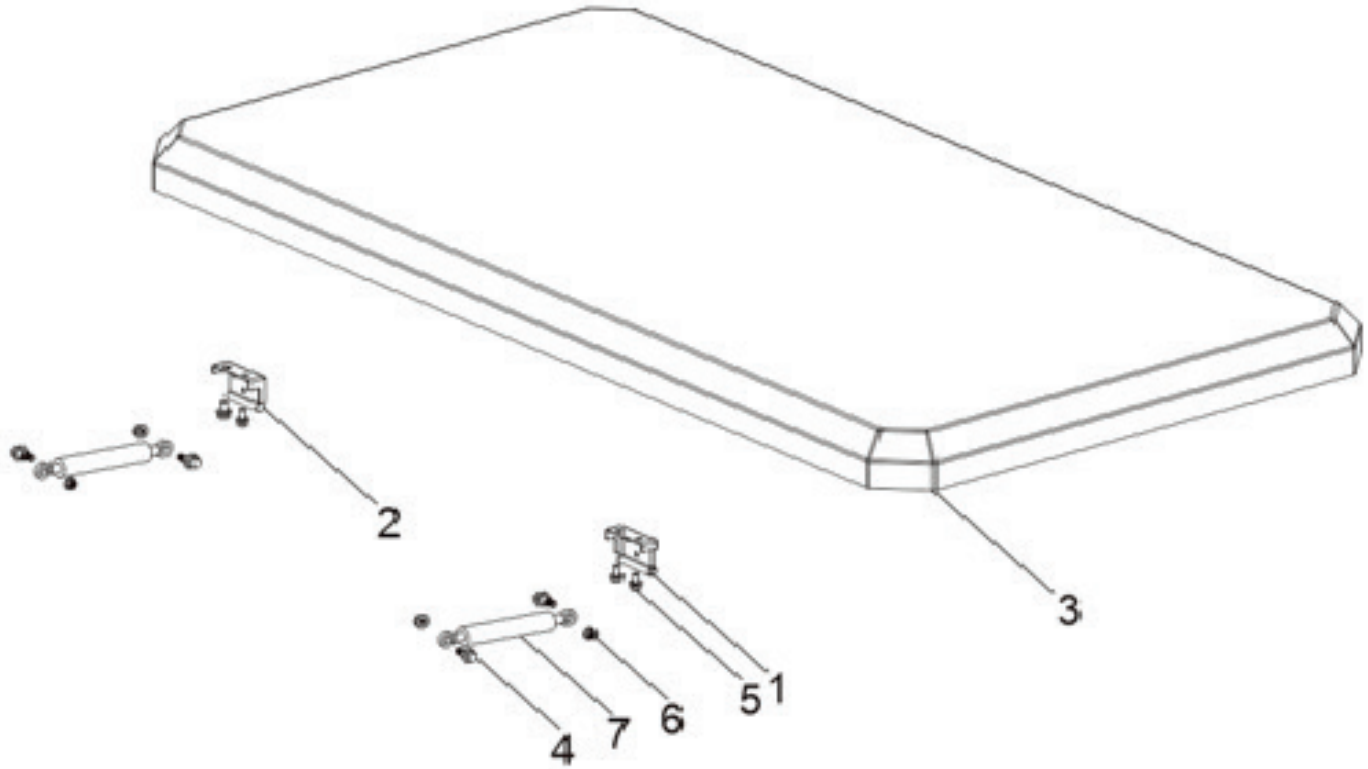

№	Артикул	Наименование	кол-во, шт
1	76024-YVX0110-H600EVO	Connection Frame	1
2	76024-YVX0210-H600EVO	Connection Frame	1
3	77001-YVX0110-GQ00EVO	Unit Upper Shield	1
4	90022-YPQ0110-05A0EVO	Hexagon Socket Flange Face Bevel Bolt	4
5	90208-Y2V0110-00A0EVO	Hexagonal Step Bolt	4
6	90327-0600-31A0EVO	Hexagon Lock Nut With Flange	4
7	93111-YVX0110-0000EVO	Hydraulic Strut	2